AVI-IFAC-5A-2CH

IFAC Wiring Diagram

2 Channel (Warm/Cool) integration with Power Supply

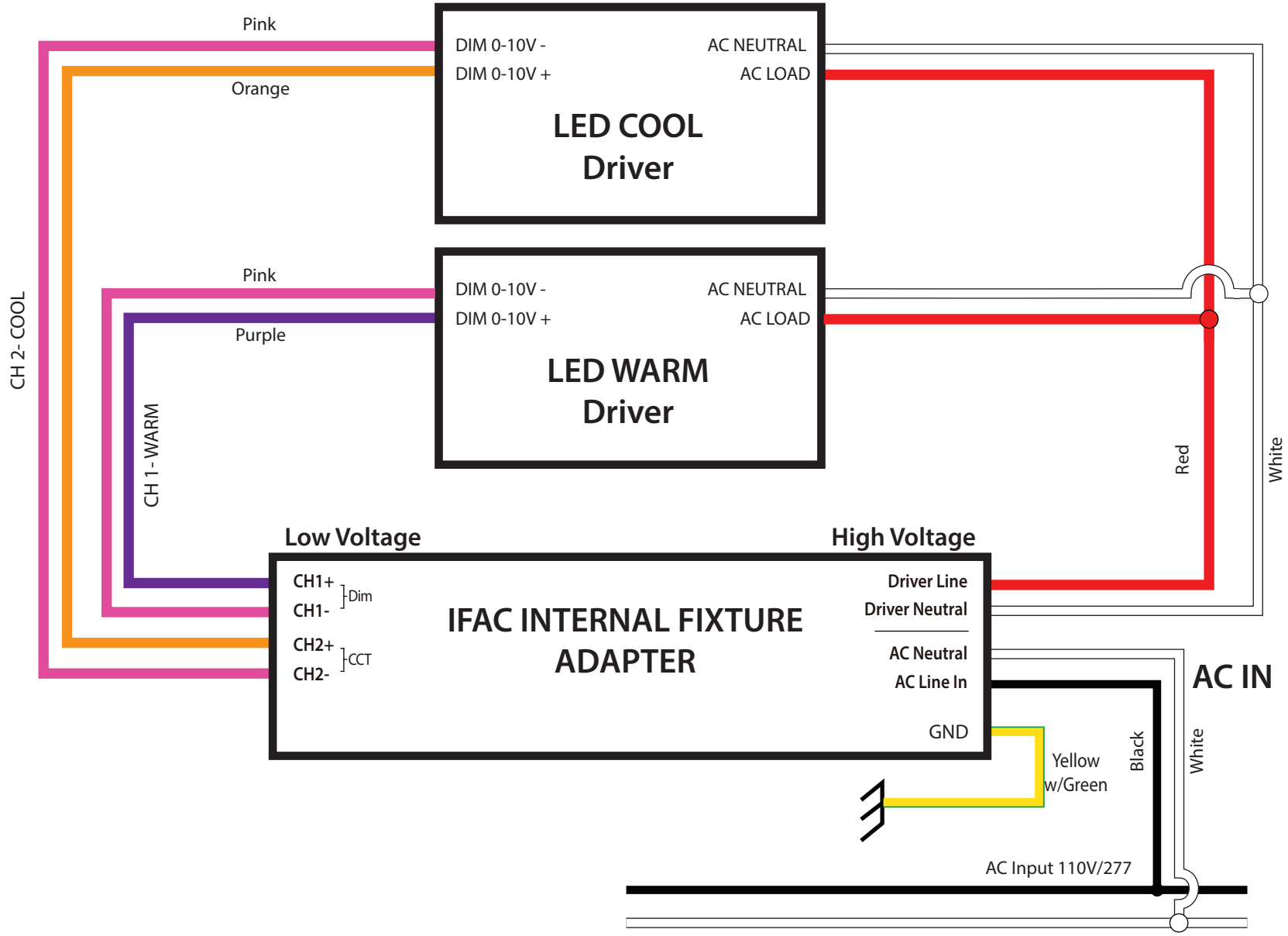

Copyright © 2022 Avi-on Labs, Inc. All Rights Reserved ALL PRODUCT, PRODUCT SPECIFICATIONS AND DATA ARE SUBJECT TO CHANGE WITHOUT NOTICE TO IMPROVE RELIABILITY, FUNCTION OR DESIGN OR OTHERWISE.The information contained herein is believed to be reliable. Avi-on makes no warranty, representation or guarantee regarding the information contained herein, the suitability of the products for any particular purpose, or the continuing production of any product. Avi-on assumes no responsibility or liability whatsoever for the use of the information contained herein. The information contained herein, or any use of such information does not grant, explicitly or implicitly, to any party any patent rights, licenses, or any other intellectual property rights, whether with regard to such information itself or anything described by such information.